TEAR SHEET

Halwell 24" Picture Light
Item # CHD 2585AB/NRT

Designer: Chapman & Myers

Height: 2.75" - 4.5"
Width: 24"
Extension: 6.25" - 8.25"
Backplate: 2.75" x 4.5" Rectangle
Finishes: AB/NRT, BZ/NRT, PN/NRT
Socket: 2 - E26 Keyless
Wattage: 2 - 8 LED T9
Weight: 6 Pounds
Note: UL Only | Requires Smaller Outlet Box

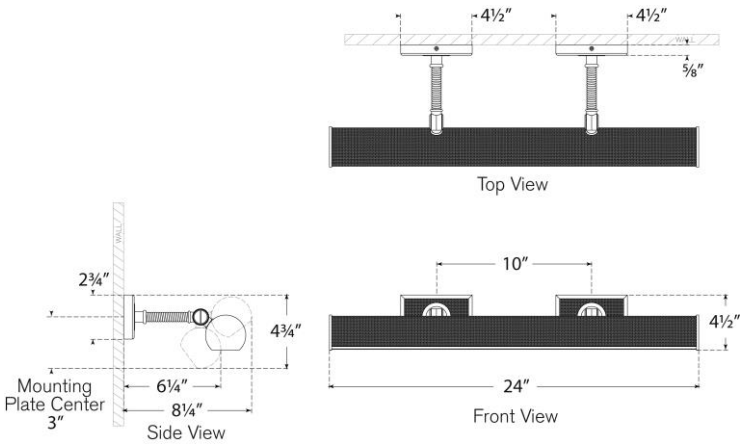

VISUAL COMFORT & CO.